DID YOU KNOW? In a boon for older homes built without it, conventional ductwork for heating and cooling may soon become a thing of the past. New and versatile technologies make it possible to heat, cool, humidify, and even supply hot water to an entire house with minimally invasive components that are sized and placed according to room dimensions and specific energy loads.

ROBSONPHOTO/ADOBE STOCK

INVISIBLE ENERGY SAVINGS

Whether completely out of sight or visible but discreet, options to heat and cool an older house are almost endless. We now have solar panels that seem to melt into the roof; radiant heat under a new tile floor; and state-of-the-art HVAC systems delivered by compact tubing or via cassettes concealed in voids between attic and ceiling. These minimally invasive systems are getting wider coverage, including in OHJ. What follows is in-depth, on-site coverage of two technologies, which have the somewhat confusing names "mini duct" and "mini split," plus updates on other techy ways to save energy without ripping out plaster. BY MARY ELLEN POLSON

LEFT In Unico's system, the plenum that connects the air handler with the small ducts is about one-third the size of conventional ducting. **ABOVE** Mini-duct outlets are small and may be ordered in colors that match the ceiling or wall.

THE PRO TIP

***Be sure to ask the manufacturer or contractor about winterizing** a new mini-duct system. If you do not close off the ceiling ducts and attic returns, moisture will accumulate in the system and may cause damage as well as mold issues.*

mini **duct** systems

Old houses simply don't have room for the conventional ductwork a whole-house, forced-air heating and cooling system requires. Ductwork consumes headroom in basements and in kitchens (as soffits). Installing the wall ducts often means losing precious storage space in closets, or disturbing original plaster and even finishes like expensive wallpaper. Mini-duct systems —offered by two companies based in the U.S., SpacePak and Unico, and one in Canada, Hi-Velocity—literally work around those problems with small ducts made of flexible tubing.

At about 3" in diameter, the ducts are small enough to be routed between studs in walls and in cavities under floors and above ceilings. **The system works by aspiration, quietly pumping warm or cool air at high velocity throughout house.** This creates a gentle circulation pattern that produces relatively even heat from floor to ceiling. Rooms typically feel more comfortable, even at lower temperature settings. The compact ductwork has also been found to leak less than conventional forced-air ducts, which means even more energy savings.

Mini-duct systems are usually equipped with the latest in air filtration and humidification ystems. **Tests show they're capable of removing up to 30 percent more humidity than a traditional forced-air system.** (The drier the air on a hot summer day, the cooler the house will feel.) The system can *add* humidity in cold, dry weather for increased comfort. Installation is not without its disruptions, but outlets are smaller than conventional floor grates and can be trimmed to accent or conceal them.

MINI-DUCT, HIGH-VELOCITY OVERVIEW

Mini-duct systems still require a furnace or fan coil, but as this diagram suggests, the small, flexible supply ducts can go just about anywhere. Hi-Velocity's system also attaches to a dual-purpose water heater or boiler for additional energy savings.

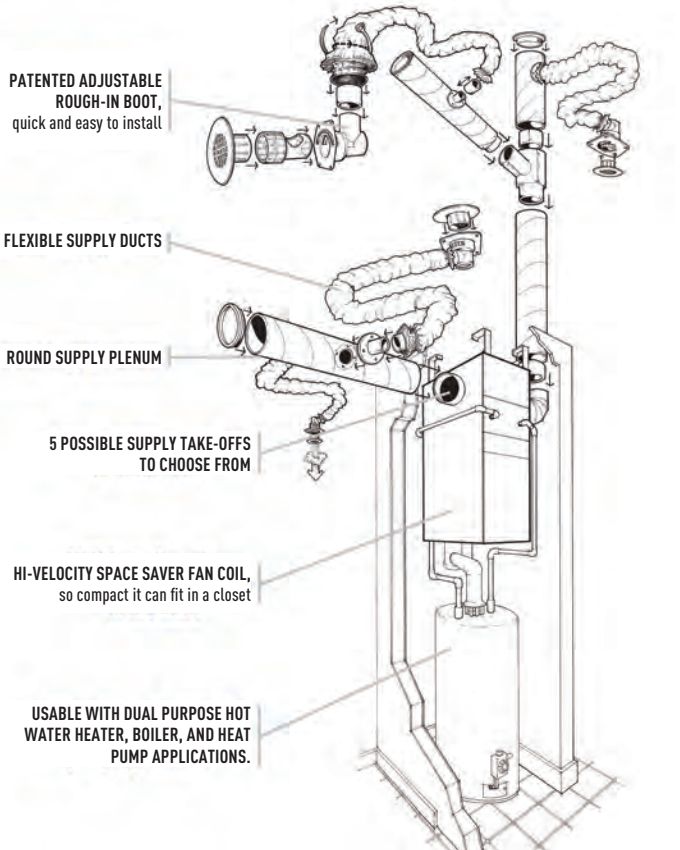

MY EXPERIENCE WITH A **Mini Duct Installation**

BY DAVID BERMAN

Converting a 1910 Shingle Style house with no air conditioning to one with a whole-house system was not something I took lightly. I have spent my life restoring old houses. If HVAC was in my future it had better be efficient and virtually invisible.

I chose a small-duct aspiration system from a reputable company, but knew that the success or failure of the experience would come down to the local contractor's willingness to be flexible. In my house, almost all rooms were mini-duct accessible through hidden spaces. Even the laundry chute connecting the third floor to the cellar would be used for the coolant and condensate lines, so there was plenty of wiggle room.

I met with all three of the manufacturer-preferred contractors working in my area. The first took no measurements and made no load assessment. (The load assessment determines how many units and components are required to efficiently cool the area.) Not surprisingly, that contractor declined to make a bid. The second contractor made two site visits and performed a load assessment. After seven months, repeated calls, and a nudge from the manufacturer, I received an exorbitant quote that suggested a lack of enthusiasm for the job. (Keep in mind that the house is finished, with historic wallpapers, and the owner is well informed.)

The third contractor preferred by Unico arrived the day after an initial email and gave me a firm quote by the end of the same day. The price was not unreasonable and included all electrical work. I agreed to proceed.

On arrival, the contractor worked out most of the component routing on a map, with changes to be made as necessary. As my house has a gambrel roof, we discovered that we could not get past certain gambrel plate members without substantially weakening the structure. That required having to run the duct hose lines over finished walls in two rooms on the third floor, and in two closets. The decorative solution in one room was to hang a period tapestry over the lines. Perhaps not everyone's solution, but it works for me.

On the ground floor, the map called for two wall returns, on either side of the staircase. In spite of this, the contractor wanted to put in floor returns, as they are easier to install. We had a bit of a go-round over that; I didn't want floor grates, which fill with dirt. After discussing where to put the returns, the contractor started to cut into the wallpapered plaster under the staircase. After determining that off-the-shelf grates would neither fit in the space nor provide enough air circulation based on size, I came up with my own solution. After adjusting the openings, I fitted the air-return holes with two antique bank-teller grates with fine, wire-mesh backing. They look like they have always been there.

Scheduled to take two weeks, the installation took a full month, including down time. Although I would caution "be careful what you wish for," I would do it again. Yes, the plaster dust and the blown insulation that got disturbed created an awful mess, but the crew really was good about cleaning up each day. And, in the end, the Unico system is whisper-quiet and quite efficient. My allergies are less reactive and, with zones set at 74 degrees, the house is wonderfully cool, with comfortably low humidity.

*DESIGNER AND WALLPAPER MAKER DAVID BERMAN IS THE OWNER OF **TRUSTWORTH STUDIOS** IN PLYMOUTH, MASSACHUSETTS.*

LEFT A six-inch opening for a return duct under the stairs had, at first, a jarring appearance. **ABOVE** The homeowner/author solved the aesthetics problem by covering the opening with an antique bank-teller grate.

BELOW Papered plaster, then wood lath, was surgically removed for the return duct.

DAVID BERMAN; JIM POLSON (OPP.); COURTESY HI-VELOCITY (ILLUS., OPP.)

LEFT Runtal's flat-panel radiator virtually disappears, taking up no floor space. **OPPOSITE** (top left, above) Small, square notches are punched into steel sheet metal at precise locations to fit finished fin coils to the radiator panels. • (top left, below) A hydraulic press bends the notched steel to create the fins. (The corrugated pockets capture hot air and channel it upward.) The completed fins roll up at the end of the run and are stacked for transfer. • (top right) Steel flat tubes—future panel fronts—are cut to length with a circular saw.

ABOVE Owen Kantor and Jonathan Wiberg in the Runtal showroom, with a custom towel radiator.

SHOPTOUR:

It's possible to visit the Runtal North America showroom in northeastern Massachusetts and have no idea that the company's innovative flat-panel radiators are fabricated, start to finish, in the same building. "We like to call it a combination of Swiss technology and Yankee craftsmanship," says Owen Kantor, the long-time vice president of marketing and sales.

"Few companies can say they manufacture in the U.S. Not only have we been making radiators here since 1989, but we also continue to expand the factory."

Runtal's sleek, European-style, flat-panel hydronic radiators are composed of thin, flat panels attached to heating fins, held in place on either side by square, tube-shaped headers that carry heated water to the panels. The entire assembly is a mere 1⅝" thick.

Installed along baseboards or cabinet toe-kicks, a one- or two-panel horizontal unit can virtually disappear. Radiators may be painted in any of 100 colors to coordinate with wall color or wood finishes, or even appliances. "Architects like our product because they can make it invisible in a traditional home," says Jonathan Wiberg, national sales manager for Runtal's residential division.

Panel assemblies can be curved to fit radius spaces like a bow window, or welded together in a three-sided configuration to fit a bay window. Electric panels—introduced about seven years ago—are installed by an electrician; hydronic models require a plumber. Like traditional radiators, these work through a combination of convection and radiant heat.

The company also offers flat and round-tube towel radiators, assembled, painted, and finished at the Massachusetts factory, and several items made in Europe. Runtal also offers sleek radiators for steam systems under its Steam Radiators Division.

I watch as two sequential machines form the fin coils. Sheet steel passes through the first machine, which punches small, square holes at precise locations. (These openings permit the finished coils to mount to the back of the radiator.) Then, a hydrau-

COURTESY RUNTAL (TOP LEFT); JIM POLSON (LEFT & OPP.)

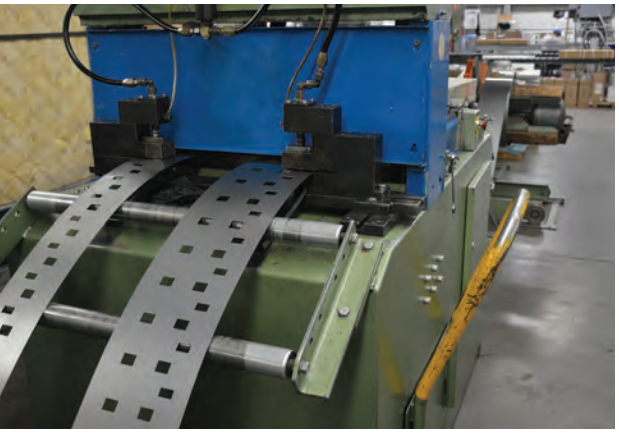

lic press crimps and bends the notched steel, creating corrugated pockets that will capture hot air and channel it upward. Panels will be joined to square tubes known as headers that hold the panel assembly in place. First, the header tubes are punched with uniformly spaced holes, which allow heated water to flow into the flat panels at the front of the radiator. Headers are cut to length and fitted with end caps, pounded into place and welded smooth. A threaded connector—to plumb the radiator to the hot water heating system—is drilled into each header.

Now the flat panels and headers are ready to be joined. An automated arm slides a flat tube into place on the header, where a robot welder joins them. The sequence is repeated until all the flat tubes are in place.

Next, a worker feeds the unit face-down into another machine. He places a length of fins, cut to length, on the back of the flat tube grid. The fins are spot welded between the folds to the heating tubes.

A finished top grille and mounts for threaded bolts are attached; bolts help level the radiator on the wall. Fully assembled, the radiator is tested by pumping air into it and submerging it in water. If no bubbles appear, it passes; when dry, it's sent to the paint line. Sprayers apply electrostatically charged epoxy particles to form a skin in the color of choice. In just over two hours, a flat panel radiator is ready to ship.

ABOVE At Runtal North America's factory, Duane Barnard TIG-welds fins to the front panels. **LEFT** Completed panels and trim covers pass through the enclosed paint station, where they're manipulated by Miguel Dia and sprayed in a single pass. Panels dry briefly, then the color is baked on at 400 degrees.

With minimal ducting, a mini-split compact cassette evenly distributes cool or warm air through a vent not much larger than a conventional forced air return.

No need for ductwork with these Slim Duct air handlers, which tuck into voids between floors.

Slim-duct systems mounted above or within the ceiling are positioned so that only the grille covering the vent shows, for virtually the same appearance as ducted central air conditioning.

MINI **SPLIT** SYSTEMS

are so named because a single power pack on the outside of the house can power one, two, or more heating and cooling units on the inside, without internal ductwork. The technology has been available for a couple of decades but is constantly evolving to meet the demands of both the new-build and retrofit markets.

The Halcyon system from Fujitsu, for example, eliminates the need for an evaporator unit as well as bulky ductwork, freeing up space in the attic and basement. Thin copper tubing pumps refrigerant directly to discreet, wall-mounted or concealed units throughout the house. Remarkably, the units work in reverse when it's cold. Even though the system runs on electricity rather than other fuels, **a whole-house, mini-split system can cut energy bills by 25 percent**, simply because the system does not use ductwork.

While wall-mounted units placed on interior walls are most familiar, newer delivery systems include hidden Slim Duct units mounted above or within the ceiling. Another option is the compact ceiling cassette. Although the unit is larger, measuring 2' x 2', only the grille shows in the ceiling. Cassettes use the latest in turbo-fan technology to distribute chilled or heated air evenly.

COURTESY FUJITSU

A standing-seam metal roof from Bridger Steel, painted Colonial Red, has a solar reflective index (SRI) of 36, meaning it qualifies for LEED credits as a "cool roof."

keep the **heat out**

In the market for a new roof? Look at the SRI (solar reflective index) on the color chart. A pitch-black roof may have a rating of zero, pure white as high as 100. The higher the index, the more the roof reflects sunlight, keeping heat out of the attic and the house. Cool-roofing products are made of highly reflective and emissive materials that stay 50–60°F cooler than traditional materials during peak summer weather. Asphalt roofs use solar reflective granules. With metal roofs, cool-roof colors are created using reflective paint. Bridger Steel's 29 Gauge colors, for example, are almost all cool roof-certified (exceptions: black, Galvalume, galvanized). Cool-roof alternatives exist for clay or concrete tiles, normally with a reflectance of 10–30 percent. By adding highly reflective pigments, manufacturers have boosted it to 25–70 percent.

Insulation UPDATE

Hiding out of sight, insulation is one of the best ways to make a house more comfortable and energy efficient. Old-house options usually boil down to adding batt or spray-foam insulation in the attic, and blown-in, loose fill in outer walls. While you might not want to use foam on 200-year-old beams or fieldstone walls, this method is effective in basements and crawl spaces. Combined with a vapor barrier on the floor, dense closed- or open-cell foam is superior at blocking penetration, especially wind-driven cold. Toxic when wet but inert once dry, spray foam requires professional installation (or a self-certification class and an OSHA-approved protective suit). One- and two-part spray-foam kits or cans (DAP, etc.) are user-friendly; use them to seal small voids around window frames, sill plates, and electrical devices.

FOR RESOURCES, SEE PAGE 103.